ColorPlus 3 Nitrat

On-line-monitoring in nitrate concentration

Properties

- On-line measurement of nitrate concentration
- Simultaneous measurement on two optical path lengths to compensate for window fouling and to increase the measuring range
- Integrated compensation of DOC and turbidity
- Flow cell easy to clean without tools
- Automatic instrument verification

Applications

- Nitrate measurement

Industries

- Treatment of drinking water

Innovations with tangible benefits

Device configuration

The instrument is equipped with different optical filters:
- 2 filters for automatic calibration verification
- 1 filter for nitrate measurement
- 1 filter for DOC and turbidity

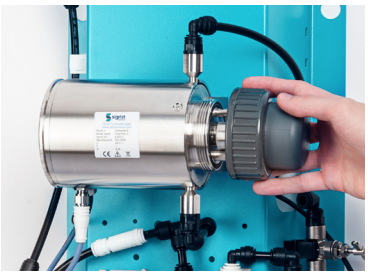

Measuring cell with a clever design

- Tool-free access
- Easy cleaning of the components in the measuring cell (window, sample distributor)

Measuring with two optical path lengths

The measuring with two path lenghts allows to:
- Increase the accuracy of the instrument over a wide measuring range
- Compensation of window fouling
- Automatic warning by the unit in case of high window contamination

Complete wall mounting set

Plate with all components of the system (Instrument, SICON, filtration unit, measuring cell drainage, flow meter and pressure valve):
- Compact measuring station
- Simple and fast installation and commissioning

Intelligent control system

The SICON control unit with state-of-the-art touch screen technology and colour display:
- Values, graphs, alarm and status messages can be presented
- An internal data logger allows recalling and displaying measured data of the last 32 days

Main technical details

Measuring principle:	Absorption
Measuring range:	0 ... 100 mg/l Nitrate
	0 .. 20 mg/l N03-N
Resolution:	0.01 mg/l
Measurig ranges:	8, freely configurable
Protection degree:	IP 67
Sample temperature:	0 ... 50 °C
Sample flow:	0.5 ... 1 l/min

Full details and technical data:

Subject to change without notice. Doc. Nr. 15496E / 4

ColorPlus 3 Nitrat

Datenblatt

Device

Measuring principle:	Absorption
Measuring range:	0 ... 100 mg/l Nitrate (0 .. 20 mg/l) N03-N
Reproducibility:	+/- 0.1 mg/l resp. +/- 1% value
Resolution:	0.01 mg/l
Measurig ranges:	8, freely configurable
Units:	mg/l
Ambient temperature:	-20 °C ... +50 °C
Enclosure material:	Stainless steel 1.4301
Protection degree:	IP 67
Weight:	3.4 kg

Measuring cell

Material:	PVC
Path lengths Nitrate:	5/1.5 mm
Window material:	Quarz
Seals:	EPDM
Sample temperature:	0 ... 50 °C
Sample pressure:	600 kPA (6 bar)
Sample flow:	0.5 ... 1 l/min
Connections:	Push fit 8 mm / G ¼" thread

Control unit SICON

Power supply:	24 VDC +/- 10%
Power consumption:	max. 8 W, including photometer
Display:	¼ VGA, 3.5"
Operation:	Touchscreen
Ambient temperature:	-20 °C ... +50 °C
Ambient humidity:	0 ... 100% RH
Protection degree:	IP 66
Outputs:	4 x 0/4 ... 20 mA galv. separated 7 x digital, freely configurable
Inputs:	5 x digital, freely configurable
Digital interfaces:	Ethernet, micro-SD card, Modbus TCP
Optional modules (max. 2):	Profibus DP, Modbus RTU, HART, Profinet IO, 4 x 0/4 ... 20 mA outputs, galv. separated 4 x 0/4 ... 20 mA inputs

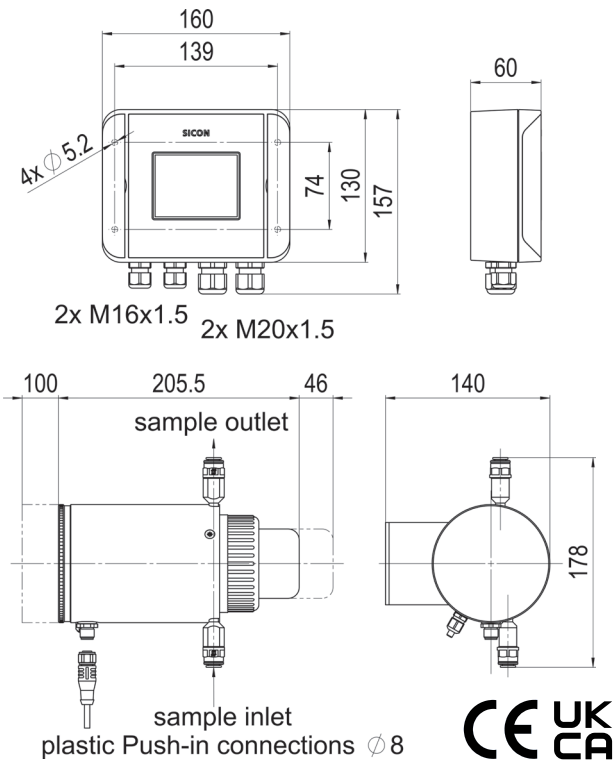

Subject to change without notice. Doc. Nr. 15496E / 4

Authorised Distributor:

NATIONWIDE OIL & GAS

46, Jalan SS 22/21, Damansara Jaya,
47400 Petaling Jaya,
Selangor Darul Ehsan, Malaysia.

Email: nog@nog.com.my
Website: www.nog.com.my