Pressure control valves

Pressure reducing valves DM 555

Universal valve for small and medium flow rates

www.mankenberg.de | Tel. +49 (0) 451 - 8 79 75 0
MANKENBERG GmbH | Spenglerstraße 99 | D-23556 Lübeck

Technical Data

Connection DN	15 - 50
Connection G	1/2 - 2
Nominal pressure PN	40
Inlet pressure	40 bar
Outlet pressure	0.5 - 20 bar
K_{vs} value	1.3 - 7.5 m³/h
Temperature	-40 up to 200 °C
Medium	liquids, gases and steam

Description

Self-acting pressure reducers are simple control valves offering accurate control while being easy to install and maintain. They control the pressure downstream of the valve without requiring pneumatic or electrical control elements.

The DM 555 pressure reducing valve is a spring-loaded proportional control valve for universal application at small and medium flow rates. The valve body and medium-wetted internal parts are made of stainless steel 316L featuring excellent corrosion resistance. The valve cone is fitted either with a metallic or a soft seal.

The outlet pressure to be controlled is balanced across the control unit by the force of the valve spring (set pressure). As the outlet pressure rises above the pressure set using the adjusting screw, the valve cone moves towards the seat and the volume of medium is reduced. As the outlet pressure drops, the valve control orifice increases; when the pipeline is depressurised, the valve is open. Rotating the adjusting screw clockwise increases the outlet pressure.

These valves are no shut-off elements ensuring a tight closing of the valve. In accordance with DIN EN 60534-4 and/or ANSI FCI 70-2 they may feature a leakage rate in closed position in compliance with the leakage classes III or V, optional IV.

Standard

- Body and medium-wetted internal parts made of stainless steel 316L
- DIN or ANSI flanges, threaded sockets G or NPT
- Non-rising adjusting screw
- Quick-release fastener for the body

Options

- Various seal materials suitable for your medium
- Special connections: aseptic, JIS flanges or welding ends; other connections on request
- Special versions on request

Operating instructions, know how and safety instructions must be observed. The pressure has always been indicated as overpressure. We reserve the right to alter technical specifications without notice.

K_{vs} Values [m³/h]				
nominal diameter	DN 15 - 50			DN 25 - 50
m³/h	1,3	2,4	4,2	7,5

Setting Ranges, Nominal Pressure				
Setting range [bar]	0.5 - 2	1 - 4	2 - 7	5 - 20
Nominal pressure PN	40/20			

max. operating pressure [bar] at operating temperature [°C]				
T	-10 - 50	100	130	200
p	40	37	35	31

Pressure control valves

Pressure reducing valves DM 555

Universal valve for small and medium flow rates

Materials			
Temperature	80 °C	130 °C	200 °C
Body	1.4408		
Spring Cap	1.4404		
Internals	1.4404 + 1.4462		
Adjusting Screw	A4		
Spring	1.4310 / 1.7102 + Delta Tone		
Metallic Seal	1.4404		
Soft Seal	NBR	EPDM optional FKM	-
O-Ring	NBR	EPDM optional FKM	FEPM

Dimensions [mm] Screwed Connection BSP and NPT						
size	nominal diameter					
	G 1/2	G 3/4	G 1	G 1 1/4	G 1 1/2	G 2
A	135	135	135	190	190	190
B	68	68	68	68	68	68
C_1	205	205	205	205	205	205
C_2	275	275	275	275	275	275
øD	110	110	110	110	110	110

Weights [kg] Screwed Connection BSP and NPT						
pressure range [bar]	nominal diameter					
	G 1/2	G 3/4	G 1	G 1 1/4	G 1 1/2	G 2
0.,5 - 2 / 1 - 4	6.6	6.6	6.6	6.6	6.6	6.6
2 -7	8.6	8.6	8.6	8.6	8.6	8.6
5 - 20	9.6	9.6	9.6	9.6	9.6	9.6

Dimensions [mm] Flange Connection EN 1092 and ANSI 150, 300						
Maß	Nennweite					
	DN 15	DN 20	DN 25	DN 32	DN 40	DN 50
A	230	230	230	230	230	230
B	68	68	68	68	68	68
C_1	205	205	205	205	205	205
C_2	275	275	275	275	275	275
øD	110	110	110	110	110	110
øE	95	105	115	140	150	165
F	19	22	23	26	26	30

Weights [kg] Flange Connection EN 1092 and ANSI 150, 300						
pressure range [bar]	nominal diameter					
	DN 15	DN 20	DN 25	DN 32	DN 40	DN 50
0.5 - 2 / 1 - 4	7.6	7.6	7.6	8.6	8.6	9.6
2 -7	8.6	9.6	9.6	10.6	10.6	11.6
5 - 20	10.6	10.6	10.6	11.6	12.6	12.6

Customs Tariff Number
84811019

Special designs on request.
The pressure has always been indicated as overpressure.
Mankenberg reserves the right to alter or improve the designs or specifications of the products described herein without notice.

Dimensional Drawing

Setting Range
0,5 - 2 bar, 1 - 4 bar

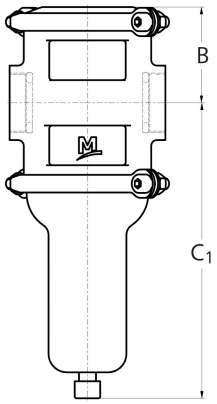

2 - 7 bar, 5 - 20 bar

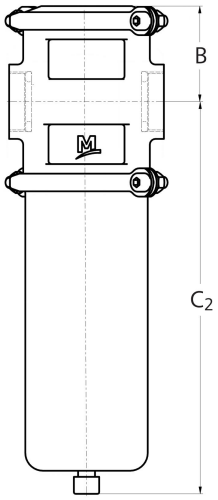

Screwed Conection
BSP and NPT

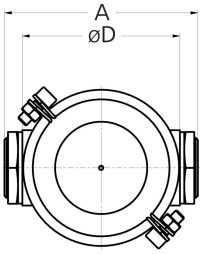

Flange Connection
EN 1092 and ANSI

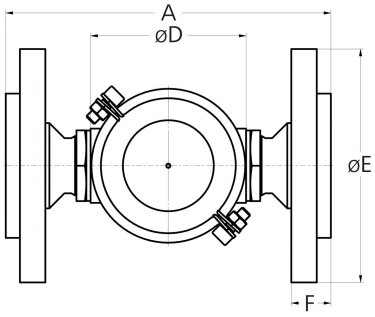

Recommended Installation

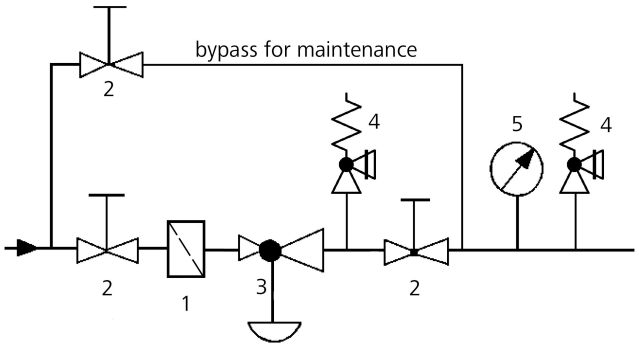

1 Strainer*
2 Shut-off Valves
3 Pressure Reducer*
4 Safety Valves*
5 Pressure Gauge
*Use MANKENBERG-Products

www.mankenberg.de | Tel. +49 (0) 451 - 8 79 75 0
MANKENBERG GmbH | Spenglerstraße 99 | D-23556 Lübeck
Page No. DM 555/2.1.213.2 - Standing 17.03.2021

Pressure control valves

Pressure reducing valves DM 555

Universal valve for small and medium flow rates

Control Curve

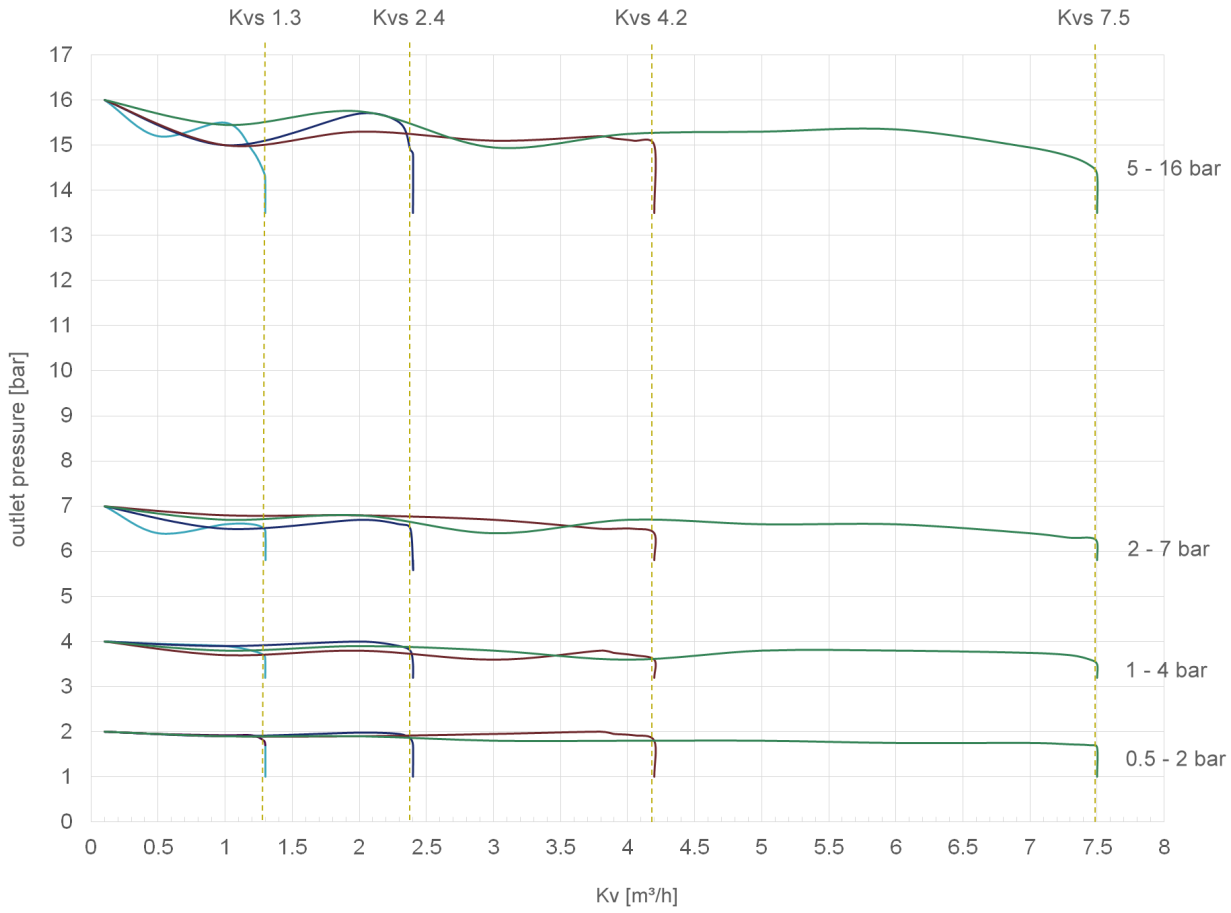

Special designs on request.
The pressure has always been indicated as overpressure.
Mankenberg reserves the right to alter or improve the designs or specifications of the products described herein without notice.

www.mankenberg.de | Tel. +49 (0) 451 - 8 79 75 0
MANKENBERG GmbH | Spenglerstraße 99 | D-23556 Lübeck

Authorised Distributor:

NATIONWIDE OIL & GAS

46, Jalan SS 22/21, Damansara Jaya,
47400 Petaling Jaya,
Selangor Darul Ehsan, Malaysia.

Email: nog@nog.com.my
Webste: www.nog.com.my